VERSION	MODIFY	DATE

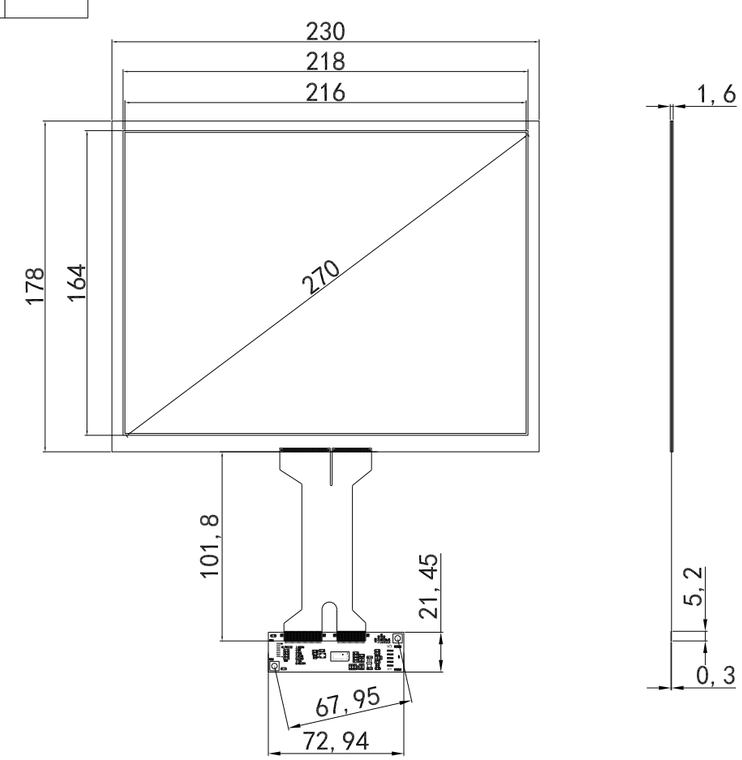

良晨光电有限公司 Lctouch Electronics Co.LTD	MODEL NO.	DRAWN:	DATE:	VERSION:	UNIT:	TOLERANCE:	SCALE:	REV:
	DR-10401DR			1.0	MM	±0.2	1:1	