*RoHS Recast Compliant*

# Industrial MicroSD 3.0

## *MicroSDHC H1-SL Product Specifications (Toshiba 15nm)*

**October 3, 2016**

*Version 1.2*

***Apacer Technology Inc.***
1F, No.32, Zhongcheng Rd., Tucheng Dist., New Taipei City, Taiwan, R.O.C
Tel: +886-2-2267-8000 Fax: +886-2-2267-2261
www.apacer.com

# FEATURES:

- **Fully Compatible with SD Card Association Specifications**
  - Part 1, Physical Layer Specification, Ver 3.01 Final
  - Part 2, File System Specification, Ver 3.00
  - Part 3, Security Specification, Ver 3.00 Final
- **Capacity Range**
  - 4, 8, 16, 32 GB
- **Performance***
  - Sustained Read: Up to 43 MB/sec
  - Sustained Write: Up to 40 MB/sec
- **SD-Protocol Compatible**
- **Supports SD SPI Mode**
- **Backward Compatible with 2.0**
- **NAND Flash Type: MLC**
- **Firmware Version: SLC-Lite**
- **Write Protect**
- **UHS-I Bus Speed Mode**
- **Flash Management**
  - Built-in advanced ECC algorithm
  - Wear-leveling
  - Flash bad-block management
  - SMART
  - Power failure management
- **Temperature Ranges**
  - Operating temperature:
    Commercial: -25°C ~ 85°C
    Extended: -40°C ~ 85°C
  - Storage temperature: -40°C ~ 85°C
- **Operating Voltage: 2.7V ~ 3.6V**
- **Power Consumption***
  - Operating: 140 mA
  - Standby: 245 µA
- **Physical Dimensions :**
  - 15mm (L) x 11mm (W) x 1mm (H)
- **RoHS Recast Compliant**

*Performance values presented here are typical and may vary depending on settings and platforms.


©2016 Apacer Technology, Inc.

# TABLE OF CONTENTS

**1. General Description** ..... **3**

**1.1 Product Function Block** ..... 3
**1.2 Flash Management** ..... 4
*1.2.1 Bad Block Management* ..... *4*
*1.2.2 Powerful ECC Algorithms* ..... *4*
*1.2.3 Wear Leveling* ..... *4*
*1.2.4 S.M.A.R.T.* ..... *4*
*1.2.5 Power Failure Management* ..... *4*

**2. Electrical Characteristics** ..... **5**

**2.1 Card Architecture** ..... 5
**2.2 Pin Assignment** ..... 5
**2.3 Capacity Specifications** ..... 6
**2.4 Performance** ..... 6
**2.5 Electrical** ..... 6

**3. Physical Characteristics** ..... **7**

**3.1 Physical Dimensions** ..... 7
**3.2 Durability Specifications** ..... 9

**4. AC Characteristics** ..... **10**

**4.1 MicroSD Interface Timing (Default)** ..... 10
**4.2 MicroSD Interface Timing (High Speed Mode)** ..... 11
**4.3 MicroSD Interface Timing (SDR12, SDR25, SDR50 and SDR104 Modes)** ..... 13
*4.3.1 Clock Timing* ..... *13*
*4.3.2 Card Input Timing* ..... *13*
*4.3.3 Card Output Timing of Fixed Data Window (SDR12, SDR25 and SDR50)* ..... *13*
*4.3.4 Output Timing of Variable Window (SDR104)* ..... *14*
*4.3.5 SD Interface Timing (DDR50 Mode)* ..... *15*
*4.3.6 Bus Timings – Parameters Values (DDR50 Mode)* ..... *16*

**5. S.M.A.R.T.** ..... **17**

**5.1 Direct Host Access to SMART Data via SD General Command (CMD56)** ..... 17
**5.2 Process for Retrieving SMART Data** ..... 17

**5. Product Ordering Information** ..... **20**

**5.1 Product Code Designations** ..... 20
**5.2 Valid Combinations** ..... 21


**©2016 Apacer Technology, Inc.**

# 1. General Description

The Micro Secure Digital (MicroSD) card version 3.0 is fully compliant to the specification released by SD Card Association. The Command List supports [Part 1 Physical Layer Specification Ver3.01 Final] definitions. Card Capacity of Non-secure Area, Secure Area Supports [Part 3 Security Specification Ver3.00 Final] Specifications.

The MicroSD 3.0 card comes with 8-pin interface, designed to operate at optimal performance. It can alternate communication protocol between the SD mode and SPI mode. It performs data error detection and correction with very low power consumption.

Apacer Industrial micro Secure Digital 3.0 card is ideal for its high performance, good reliability and wide compatibility. Not to mention that it's well adapted for hand-held applications in semi-industrial/medical markets already. The new MicroSD 3.0 card is capable of delivering better performance and P/E cycles.

## 1.1 Product Function Block

The MicroSD contains a card controller and a memory core for the SD standard interface.

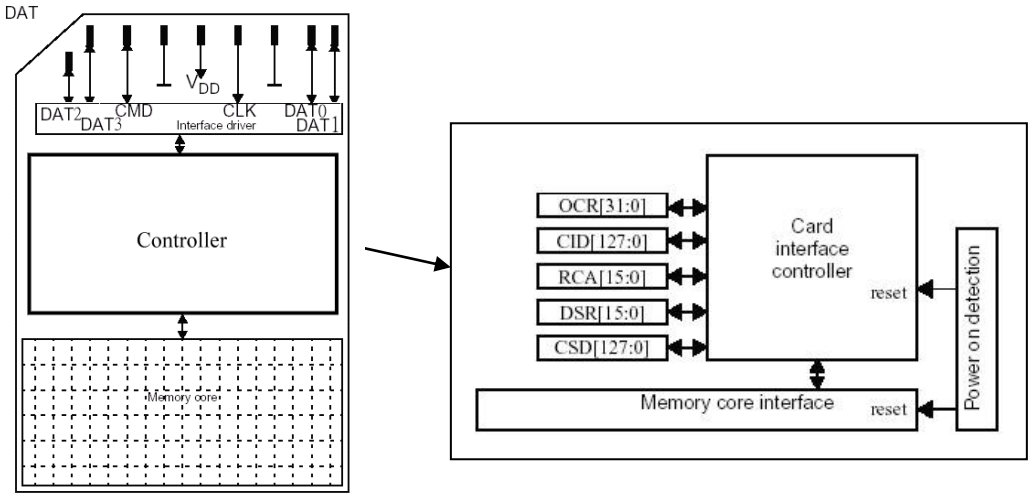



©2016 Apacer Technology, Inc.

## 1.2 Flash Management

### 1.2.1 Bad Block Management

Bad blocks are blocks that include one or more invalid bits, and their reliability is not guaranteed. Blocks that are identified and marked as bad by the manufacturer are referred to as “Initial Bad Blocks”. Bad blocks that are developed during the lifespan of the flash are named “Later Bad Blocks”. Apacer implements an efficient bad block management algorithm to detect the factory-produced bad blocks and manages any bad blocks that appear with use. This practice further prevents data being stored into bad blocks and improves the data reliability.

### 1.2.2 Powerful ECC Algorithms

Flash memory cells will deteriorate with use, which might generate random bit errors in the stored data. Thus, the MicroSD card applies the BCH ECC Algorithm, which can detect and correct errors occur during read process, ensure data been read correctly, as well as protect data from corruption.

### 1.2.3 Wear Leveling

NAND Flash devices can only undergo a limited number of program/erase cycles, and in most cases, the flash media are not used evenly. If some area get updated more frequently than others, the lifetime of the device would be reduced significantly. Thus, Wear Leveling technique is applied to extend the lifespan of NAND Flash by evenly distributing writes and erase cycles across the media.
Apacer provides advanced Wear Leveling algorithm, which can efficiently spread out the flash usage through the whole flash media area. Moreover, by implementing both dynamic and static Wear Leveling algorithms, the life expectancy of the NAND Flash is greatly improved.

### 1.2.4 S.M.A.R.T.

SMART, an acronym for Self-Monitoring, Analysis and Reporting Technology, is an special function that allows a memory device to automatically monitor its health. Apacer provides a program named SmartInfo Tool to observe Apacer’s SD and MicroSD cards. Note that this tool can only support Apacer’s industrial SD and MicroSD cards. This tool will display firmware version, endurance life ratio, good block ratio, and so forth.

### 1.2.5 Power Failure Management

Apacer industrial SD and MicroSD cards provide complete data protection mechanism during every abnormal power shutdown situation, such as power failure at programming data, updating system tables, erasing blocks, etc. Apacer Power-Loss Protection mechanism includes:

- Maintaining data correctness and increasing the reliability of the data stored in the NAND Flash memory.
- Protecting F/W table and the data written to flash from data loss in the event of power off.
- The data written at the exact moment power off will be lost, and the max data loss is 16 sectors.


©2016 Apacer Technology, Inc.

# 2. Electrical Characteristics

## 2.1 Card Architecture

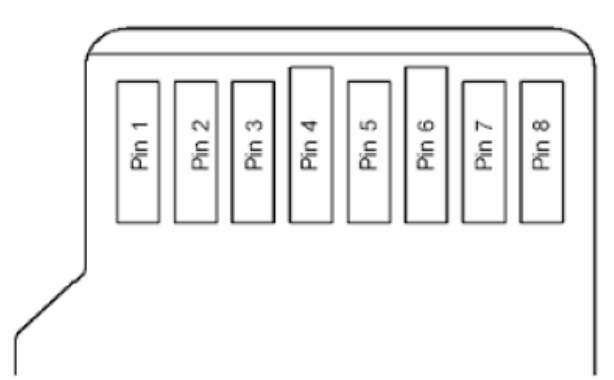


## 2.2 Pin Assignment

**Table 2-1** Pin Descriptions

| Pin | SD Mode | | SPI Mode | |
|---|---|---|---|---|
| | Name | Description | Name | Description |
| 1 | DAT2 | Data line[bit 2] | Reserved | |
| 2 | CD/DAT3 | Card Detect/Data line [bit 3] | CS | Chip select |
| 3 | CMD | Command/Response | DI | Data in |
| 4 | VDD | Supply voltage | VDD | Supply voltage |
| 5 | CLK | Clock | SCLK | Clock |
| 6 | VSS | Supply voltage ground | VSS | Supply voltage ground |
| 7 | DAT0 | Data line[bit 0] | DO | Data out |
| 8 | DAT1 | Data line[bit 1] | Reserved | |


©2016 Apacer Technology, Inc.

## 2.3 Capacity Specifications

The following table shows the specific capacity for the SD 3.0 card.

**Table 2-2** Capacity

| Capacity | Total Bytes |
|---|---|
| 4 GB | 3,971,973,120 |
| 8 GB | 7,960,756,224 |
| 16 GB | 16,013,819,904 |
| 32 GB | 32,094,781,440 |

Note: Total bytes are viewed under Windows operating system and were measured by SD format too.

## 2.4 Performance

Performances of the SD 3.0 card are shown in the table below.

**Table 2-3** Performance

| Capacity / Modes | 4 GB | 8 GB | 16 GB | 32 GB |
|---|---|---|---|---|
| **Read (MB/s)** | 43 | 43 | 43 | 43 |
| **Write (MB/s)** | 39 | 40 | 40 | 40 |

Note: Results may vary depending on settings and platforms.

## 2.5 Electrical

**Table 2-4** Operating Voltage

| Symbol | Parameter | Min. | Max. | Unit |
|---|---|---|---|---|
| $V_{DD}$ | Power Supply Voltage | 2.7 | 3.6 | V |

**Table 2-5** Power Consumption (typical)

| Capacity / Modes | 4 GB | 8 GB | 16 GB | 32 GB |
|---|---|---|---|---|
| **Operating (mA)** | 75 | 95 | 125 | 140 |
| **Standby (µA)** | 195 | 220 | 250 | 245 |

Note: Results may vary depending on settings and platforms.


©2016 Apacer Technology, Inc.

# 3. Physical Characteristics

## 3.1 Physical Dimensions

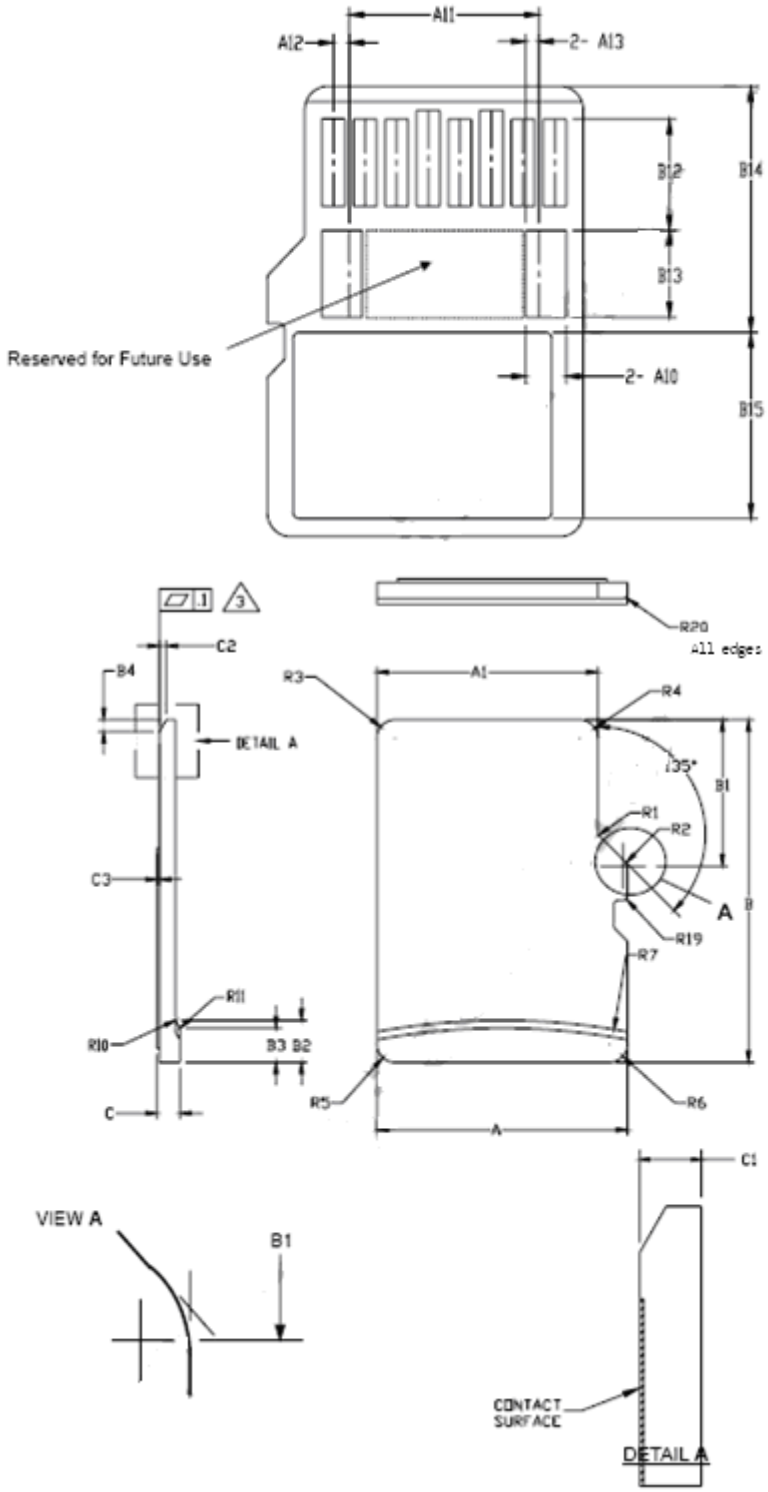



©2016 Apacer Technology, Inc.

| | COMMON DIMENSIONS | | | |
|---|---|---|---|---|
| SYMBOL | MIN | NOM | MAX | NOTE |
| A | 10.90 | 11.00 | 11.10 | |
| A1 | 9.60 | 9.70 | 9.80 | |
| A2 | - | 3.85 | - | BASIC |
| A3 | 7.60 | 7.70 | 7.80 | |
| A4 | - | 1.10 | - | BASIC |
| A5 | 0.75 | 0.80 | 0.85 | |
| A6 | - | - | 8.50 | |
| A7 | 0.90 | - | - | |
| A8 | 0.60 | 0.70 | 0.80 | |
| A9 | 0.80 | - | - | |
| A10 | 1.35 | 1.40 | 1.45 | |
| A11 | 6.50 | 6.60 | 6.70 | |
| A12 | 0.50 | 0.55 | 0.60 | |
| A13 | 0.40 | 0.45 | 0.50 | |
| B | 14.90 | 15.00 | 15.10 | |
| B1 | 6.30 | 6.40 | 6.50 | |
| B2 | 1.64 | 1.84 | 2.04 | |
| B3 | 1.30 | 1.50 | 1.70 | |
| B4 | 0.42 | 0.52 | 0.62 | |
| B5 | 2.80 | 2.90 | 3.00 | |
| B6 | 5.50 | - | - | |
| B7 | 0.20 | 0.30 | 0.40 | |
| B8 | 1.00 | 1.10 | 1.20 | |
| B9 | - | - | 9.00 | |
| B10 | 7.80 | 7.90 | 8.00 | |
| B11 | 1.10 | 1.20 | 1.30 | |
| B12 | 3.60 | 3.70 | 3.80 | |
| B13 | 2.80 | 2.90 | 3.00 | |
| B14 | 8.20 | - | - | |
| B15 | - | - | 6.20 | |
| C | 0.90 | 1.00 | 1.10 | |
| C1 | 0.60 | 0.70 | 0.80 | |
| C2 | 0.20 | 0.30 | 0.40 | |
| C3 | 0.00 | - | 0.15 | |
| D1 | 1.00 | - | - | |
| D2 | 1.00 | - | - | |
| D3 | 1.00 | - | - | |
| R1 | 0.20 | 0.40 | 0.60 | |
| R2 | 0.20 | 0.40 | 0.60 | |
| R3 | 0.70 | 0.80 | 0.90 | |
| R4 | 0.70 | 0.80 | 0.90 | |
| R5 | 0.70 | 0.80 | 0.90 | |
| R6 | 0.70 | 0.80 | 0.90 | |
| R7 | 29.50 | 30.00 | 30.50 | |
| R10 | - | 0.20 | - | |
| R11 | - | 0.20 | - | |
| R17 | 0.10 | 0.20 | 0.30 | |
| R18 | 0.20 | 0.40 | 0.60 | |
| R19 | 0.05 | - | 0.20 | |
| R20 | 0.02 | - | 0.15 | |

Notes:

1. DIMENSIONING AND TOLERANCING PER ASME Y14.5M-1994.
2. DIMENSIONS ARE IN MILLIMETERS.
3. COPLANARITY IS ADDITIVE TO C1 MAX THICKNESS.


©2016 Apacer Technology, Inc.

## 3.2 Durability Specifications

**Table 3-1** Durability Specifications

| Environment | Specifications |
|---|---|
| Temperature | -25°C to 85°C (Operating)<br>-40°C to 85°C (Extended) |
| | -40°C to 85°C (Storage) |
| Shock | 1,.500G, 0.5ms |
| Vibration | 20Hz~80Hz/1.52mm (frequency/displacement)<br>80Hz~2000Hz/20G (frequency/displacement)<br>X, Y, Z axis/60mins each |
| Drop | 150cm free fall, 6 face of each |
| Bending | ≧10N, hold 1min/5times |
| Torque | 0.1N-m or 2.5deg, hold 5min/5times |
| Salt spray | Concentration: 3% NaCl at 35°C (storage for 24 hours) |
| Waterproof | JIS IPX7 compliance<br>Water temperature 25°C<br>Water depth: the lowest point of unit is locating 1000mm below surface (storage for 30 mins) |
| X-Ray Exposure | 0.1 Gy of medium-energy radiation (70 KeV to 140 KeV, cumulative dose per year) to both sides of the card (storage for 30 mins) |
| Switch cycle | 0.4~0.5N, 1000 times |
| Durability | 10,000 times mating cycle |
| ESD | Pass |


©2016 Apacer Technology, Inc.

# 4. AC Characteristics

## 4.1 MicroSD Interface Timing (Default)

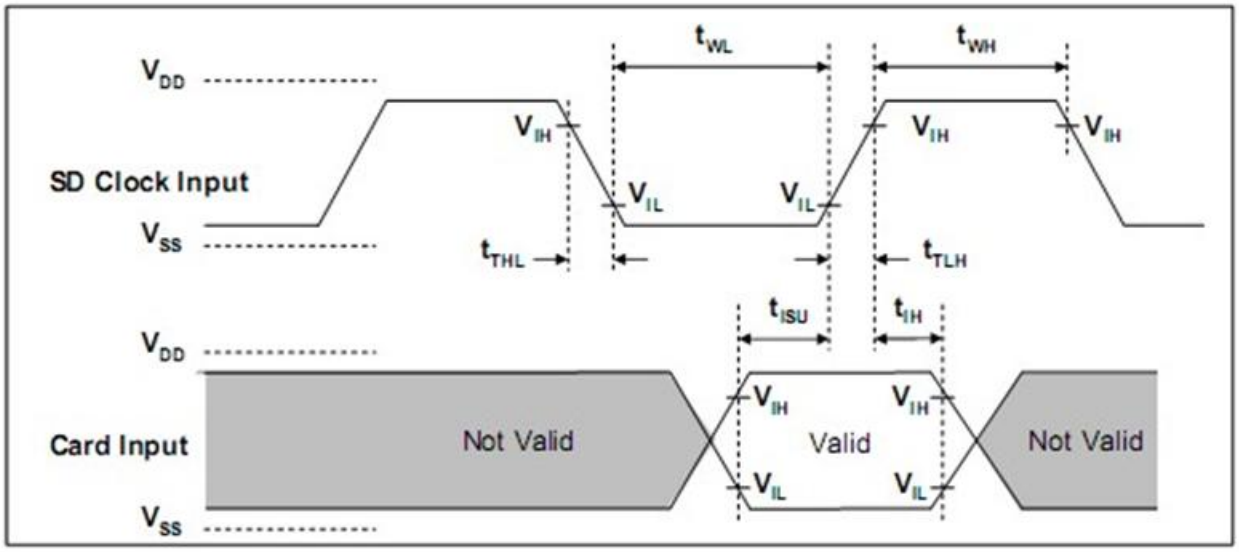


Card input Timing (Default Speed Card)

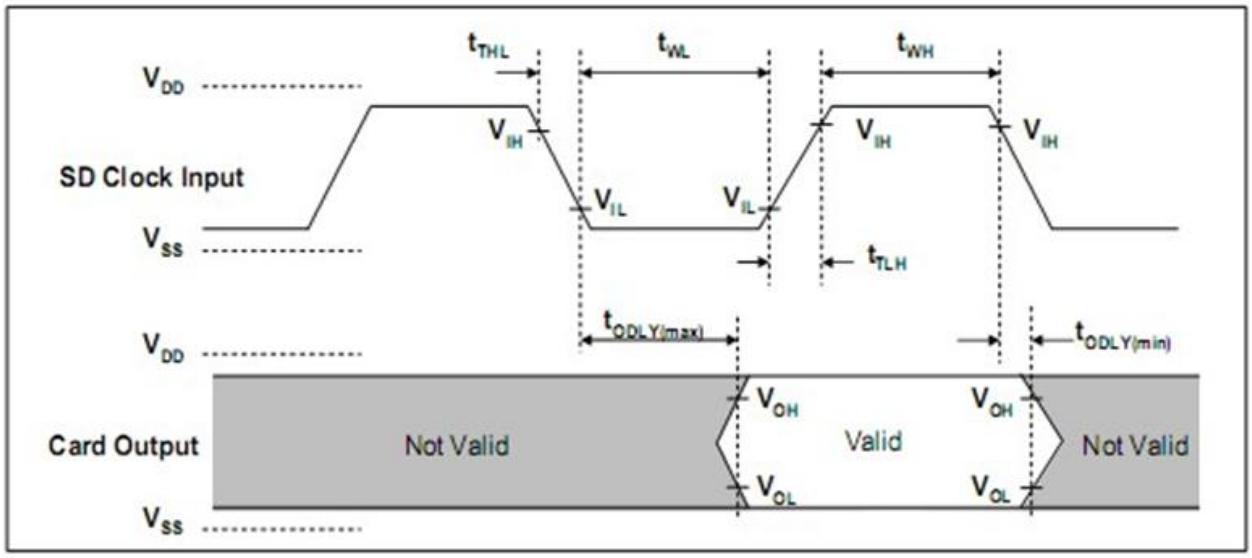


Card Output Timing (Default Speed Mode)


©2016 Apacer Technology, Inc.

| SYMBOL | PARAMETER | MIN | MAX | UNIT | REMARK |
|---|---|---|---|---|---|
| **Clock CLK (All values are referred to min($V_{IH}$) and max($V_{IL}$))** | | | | | |
| $f_{PP}$ | Clock frequency data transfer | 0 | 25 | MHz | $C_{card} \leq 10$ pF (1 card) |
| $f_{OD}$ | Clock frequency identification | 0(1)/100 | 400 | KHz | $C_{card} \leq 10$ pF (1 card) |
| $t_{WL}$ | Clock low time | 10 | - | ns | $C_{card} \leq 10$ pF (1 card) |
| $t_{WH}$ | Clock high time | 10 | - | ns | $C_{card} \leq 10$ pF (1 card) |
| $t_{TLH}$ | Clock rise time | - | 10 | ns | $C_{card} \leq 10$ pF (1 card) |
| $t_{THL}$ | Clock fall time | - | 10 | ns | $C_{card} \leq 10$ pF (1 card) |
| **Inputs CMD, DAT (Referenced to CLK)** | | | | | |
| $t_{ISU}$ | Input setup time | 5 | - | ns | $C_{card} \leq 10$ pF (1 card) |
| $t_{TH}$ | Input hold time | 5 | - | ns | $C_{card} \leq 10$ pF (1 card) |
| **Outputs CMD, DAT (Referenced to CLK)** | | | | | |
| $t_{ODLY}$ | Output delay time during data transfer mode | 0 | 14 | ns | $C_L \leq 40$ pF (1 card) |
| $t_{OH}$ | Output hold time | 0 | 50 | ns | $C_L \leq 40$ pF (1 card) |

(1)0Hz means to stop the clock. The given minimum frequency range is for cases that require the clock to be continued.

## 4.2 MicroSD Interface Timing (High Speed Mode)

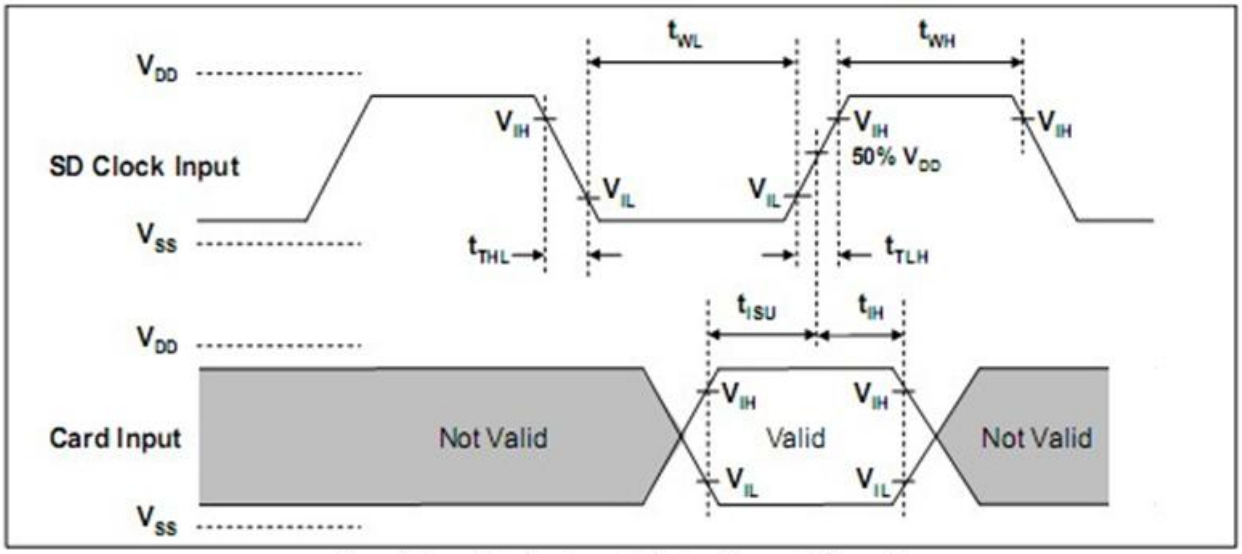


Card Input Timing (High Speed Card)


©2016 Apacer Technology, Inc.

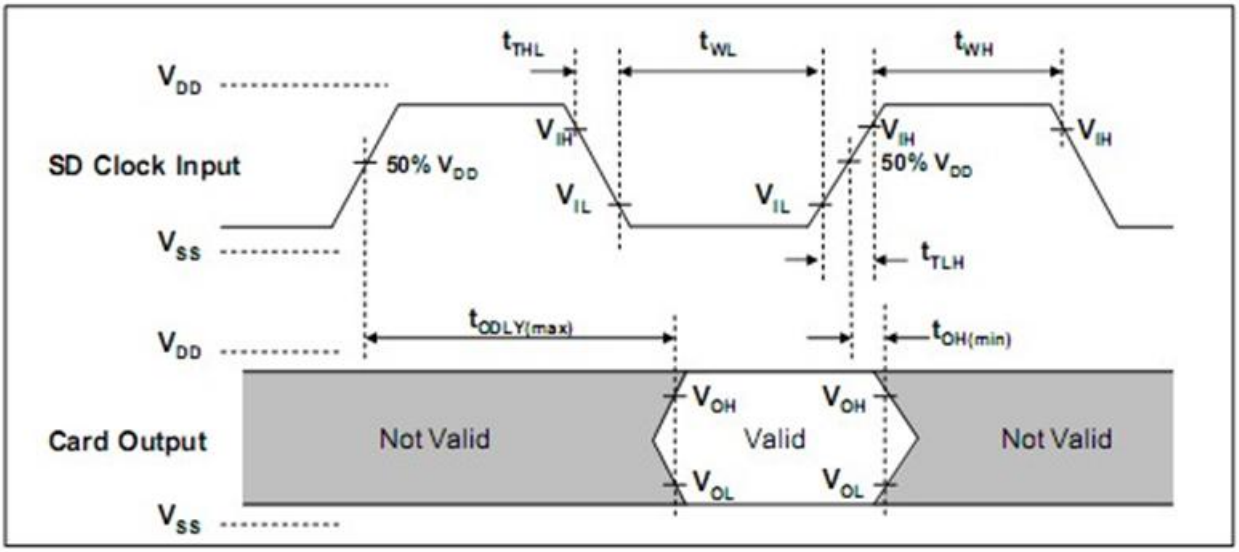


**Card Output Timing (High Speed Mode)**

| SYMBOL | PARAMETER | MIN | MAX | UNIT | REMARK |
|---|---|---|---|---|---|
| **Clock CLK (All values are referred to min($V_{IH}$) and max($V_{IL}$))** | | | | | |
| $f_{PP}$ | Clock frequency data transfer | 0 | 50 | MHz | Ccard ≤ 10 pF (1 card) |
| $t_{WL}$ | Clock low time | 7 | - | ns | Ccard ≤ 10 pF (1 card) |
| $t_{WH}$ | Clock high time | 7 | - | ns | Ccard ≤ 10 pF (1 card) |
| $t_{TLH}$ | Clock rise time | - | 3 | ns | Ccard ≤ 10 pF (1 card) |
| $t_{THL}$ | Clock fall time | - | 3 | ns | Ccard ≤ 10 pF (1 card) |
| **Inputs CMD, DAT (Referenced to CLK)** | | | | | |
| $t_{ISU}$ | Input setup time | 6 | - | ns | Ccard ≤ 10 pF (1 card) |
| $t_{TH}$ | Input hold time | 2 | - | ns | Ccard ≤ 10 pF (1 card) |
| **Outputs CMD, DAT (Referenced to CLK)** | | | | | |
| $t_{ODLY}$ | Output delay time during data transfer made | - | 14 | ns | CL ≤ 40 pF (1 card) |
| $t_{OH}$ | Output hold time | 2.5 | - | ns | CL ≥ 15 pF (1 card) |
| $C_L$ | Total system capacitance for each line* | - | 40 | pF | 1 card |

*In order to satisfy severe timing, host shall run on only one card


©2016 Apacer Technology, Inc.

## 4.3 MicroSD Interface Timing (SDR12, SDR25, SDR50 and SDR104 Modes)

### 4.3.1 Clock Timing

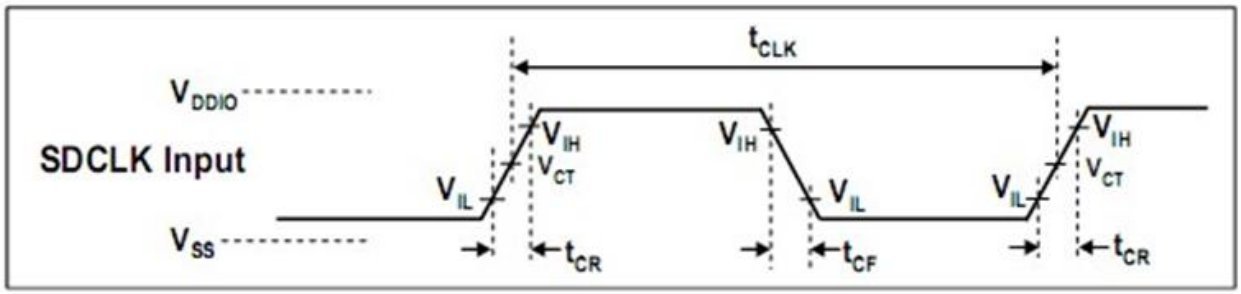


Clock Signal Timing

| SYMBOL | MIN | MAX | UNIT | REMARK |
|---|---|---|---|---|
| $t_{CLK}$ | 4.8 | - | ns | 208MHz (Max.), Between rising edge, $V_{CT}$ = 0.975V |
| $t_{CR}$, $t_{CF}$ | - | 0.2* $t_{CLK}$ | ns | $t_{CR}$, $t_{CF}$ < 2.00ns (max.) at 208MHz, $C_{CARD}$=10pF<br>$t_{CR}$, $t_{CF}$ < 2.00ns (max.) at 100MHz, $C_{CARD}$=10pF<br>The absolute maximum value of $t_{CR}$, $t_{CF}$ is 10ns regardless of clock frequency. |
| Clock Duty | 30 | 70 | % | |

### 4.3.2 Card Input Timing

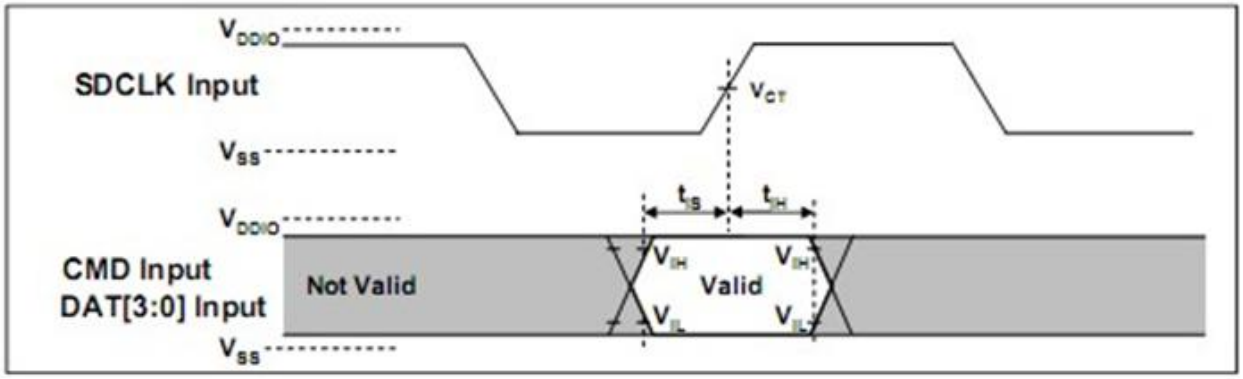


Card Input Timing

| SYMBOL | MIN | MAX | UNIT | SDR104 MODE |
|---|---|---|---|---|
| $t_{IS}$ | 1.40 | - | ns | $C_{CARD}$ = 10pF, $V_{CT}$ = 0.975V |
| $t_{IH}$ | 0.80 | - | ns | $C_{CARD}$ = 5pF, $V_{CT}$ = 0.975V |
| **SYMBOL** | **MIN** | **MAX** | **UNIT** | **SDR12, SDR25 and SDR50 MODES** |
| $t_{IS}$ | 3.00 | - | ns | $C_{CARD}$ = 10pF, $V_{CT}$ = 0.975V |
| $t_{IH}$ | 0.80 | - | ns | $C_{CARD}$ = 5pF, $V_{CT}$ = 0.975V |

### 4.3.3 Card Output Timing of Fixed Data Window (SDR12, SDR25 and SDR50)


©2016 Apacer Technology, Inc.

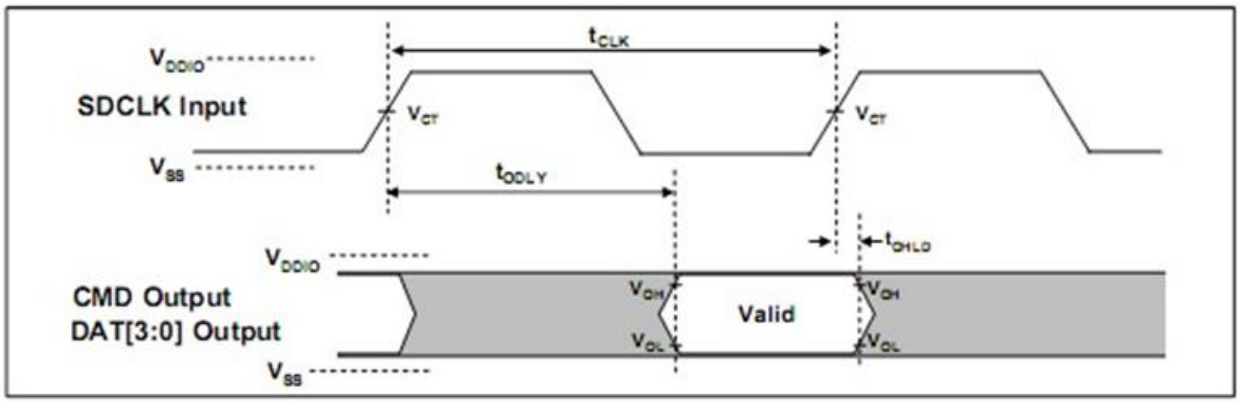


Output Timing of Fixed Date Window

| SYMBOL | MIN | MAX | UNIT | REMARK |
|---|---|---|---|---|
| $t_{ODLY}$ | - | 7.5 | ns | $t_{CLK}$ ≥10.0ns, CL=30pF, using driver Type B, for SDR50. |
| $t_{ODLY}$ | | 14 | ns | $t_{CLK}$ ≥20.0ns, CL=40pF, using driver Type B, for SDR25 and SDR12. |
| $t_{OH}$ | 1.5 | - | ns | Hold time at the $t_{ODLY}$ (min.). CL=15pF |

### 4.3.4 Output Timing of Variable Window (SDR104)

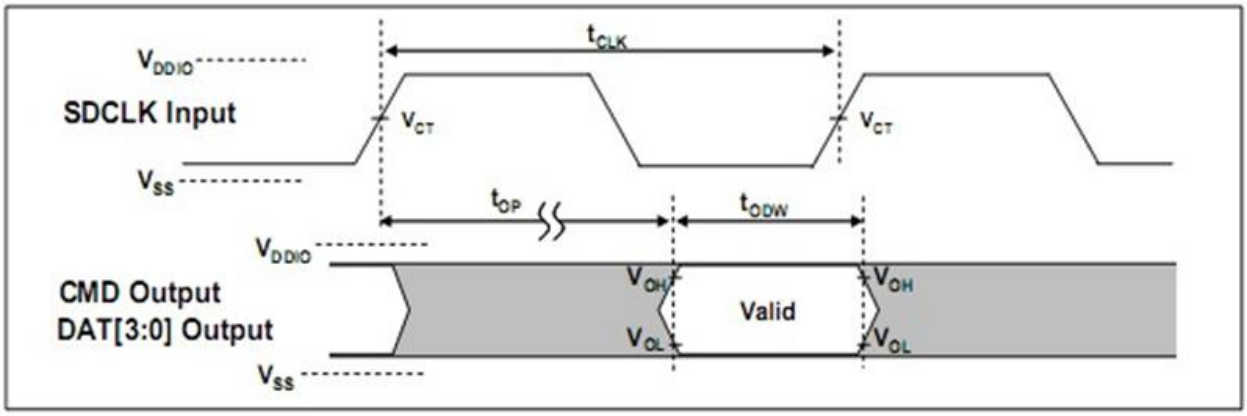


Output Timing of Variable Data Window

| SYMBOL | MIN | MAX | UNIT | REMARK |
|---|---|---|---|---|
| $t_{OP}$ | - | 2 | UI | Card Output Phase |
| $\Delta t_{OP}$ | -350 | +1550 | ps | Delay variation due to temperature change after tuning |
| $t_{ODW}$ | 0.60 | - | UI | $t_{ODW}$ = 2.88ns at 208MHz |


©2016 Apacer Technology, Inc.

### 4.3.5 SD Interface Timing (DDR50 Mode)

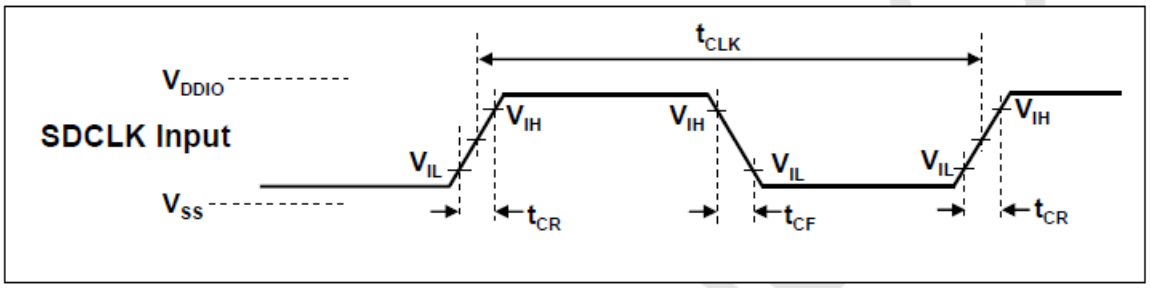


**Clock Signal Timing**

| SYMBOL | MIN | MAX | UNIT | REMARK |
|---|---|---|---|---|
| $t_{CLK}$ | 20 | - | ns | 50MHz (Max.), Between rising edge |
| $t_{CR}$, $t_{CF}$ | - | 0.2* $t_{CLK}$ | ns | $t_{CR}$, $t_{CF}$ < 4.00ns (max.) at 50MHz, CCARD=10pF |
| Clock Duty | 45 | 55 | % | |

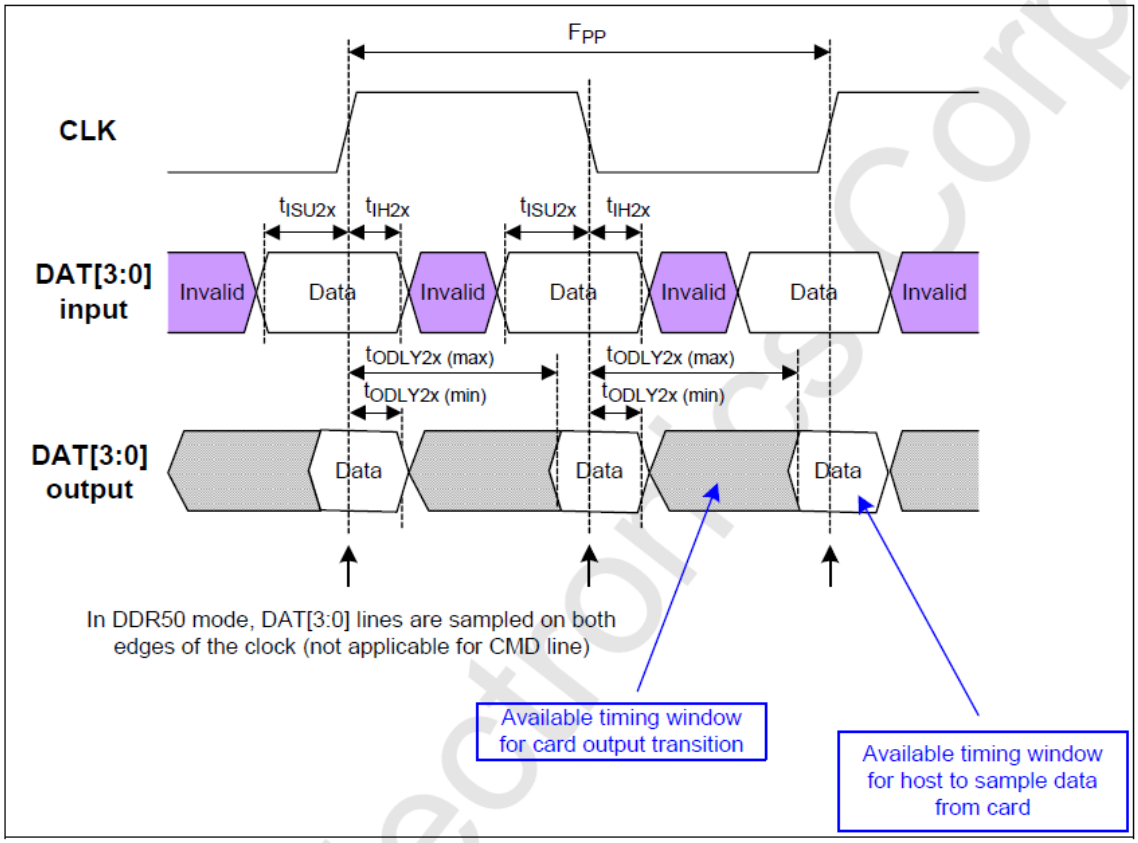


**Timing Diagram DAT Inputs/Outputs Referenced to CLK in DDR50 Mode**


©2016 Apacer Technology, Inc.

### 4.3.6 Bus Timings – Parameters Values (DDR50 Mode)

| Symbol | Parameters | Min | Max | Unit | Remark |
|---|---|---|---|---|---|
| **Input CMD** (referenced to CLK rising edge) | | | | | |
| $t_{ISU}$ | Input set-up time | 6 | - | ns | $C_{card} \leq$ 10 pF (1 card) |
| $t_{IH}$ | Input hold time | 0.8 | - | ns | $C_{card} \leq$ 10 pF (1 card) |
| **Output CMD** (referenced to CLK rising edge) | | | | | |
| $t_{ODLY}$ | Output Delay time during Data Transfer Mode | - | 13.7 | ns | $C_L \leq 30$ pF (1 card) |
| $T_{OH}$ | Output Hold time | 1.5 | - | ns | $C_L \geq 15$ pF (1 card) |
| **Inputs DAT** (referenced to CLK rising and falling edges) | | | | | |
| $t_{ISU2x}$ | Input set-up time | 3 | - | ns | $C_{card} \leq$ 10 pF (1 card) |
| $t_{IH2x}$ | Input hold time | 0.8 | - | ns | $C_{card} \leq$ 10 pF (1 card) |
| **Outputs DAT** (referenced to CLK rising and falling edges) | | | | | |
| $t_{ODLY2x}$ | Output Delay time during Data Transfer Mode | - | 7.0 | ns | $C_L \leq 25$ pF (1 card) |
| $T_{OH2x}$ | Output Hold time | 1.5 | - | ns | $C_L \geq 15$ pF (1 card) |


©2016 Apacer Technology, Inc.

# 5. S.M.A.R.T.

## 5.1 Direct Host Access to SMART Data via SD General Command (CMD56)

CMD 56 is structured as a 32-bit argument. The implementation of the general purpose functions will arrange the CMD56 argument into the following format:

| [31:24] | [23:16] | [15:18] | [7:1] | [0] |
|---|---|---|---|---|
| Argument #3 | Argument #2 | Argument #1 | Index | "1/0" |

- Bit [0]: Indicates Read Mode when bit is set to [1] or Write Mode when bit is cleared [0]. Depending on the function, either Read Mode or Write Mode can be used.
- Bit [7:1]: Indicates the index of the function to be executed:
  - Read Mode: Index = 0x10 Get SMART Command Information
  - Write Mode: Index = 0x08 Pre-Load SMART Command Information
- Bit [15:8]: Function argument #1 (1-byte)
- Bit [23:16]: Function argument #2 (1-byte)
- Bit [31:24]: Function argument #3 (1-byte)

## 5.2 Process for Retrieving SMART Data

Retrieving SMART data requires the following two commands executed in sequence and in accordance with the SD Association standard flowchart for CMD56 (see below).

### Step 1: Write Mode – [0x08] Pre-Load SMART Command Information

| Sequence | Command | Argument | Expected Data |
|---|---|---|---|
| Pre-Load SMART Command Information | CMD56 | [0] "0" (Write Mode)<br>[1:7] "0001 000" (Index = 0x08)<br>[8:511] All '0' (Reserved) | No expected data |


©2016 Apacer Technology, Inc.

### Step 2: Read Mode – [0x10] Get SMART Command Information

| Sequence | Command | Argument | Expected Data |
|---|---|---|---|
| Get SMART Command Information | CMD56 | [0] "1" (Read Mode)<br>[1:7] "0001 000" (Index = 0x10)<br>[8:31] All '0' (Reserved) | 1 sector (512 bytes) of response data<br><br>byte[0-8] Flash ID<br>byte[9-10] IC Version<br>byte[11-12] FW Version<br>byte[13] Reserved<br>byte[14] CE Number<br>byte[15] Reserved<br>byte[16-17] Bad Block Replace Maximum<br>byte[18] Reserved<br>byte[32-63] Bad Block count per Die<br>byte[64-65] Good Block Rate(%)<br>byte[66-79] Reserved<br>byte[80-83] Total Erase Count<br>byte[84-95] Reserved<br>byte[96-97] Endurance (Remain Life) (%)<br>byte[98-99] Average Erase Count – L*<br>byte[100-101] Minimum Erase Count – L*<br>byte[102-103] Maximum Erase Count – L*<br>byte[104-105] Average Erase Count – H*<br>byte[106-107] Minimum Erase Count – H*<br>byte[108-109] Maximum Erase Count – H*<br>byte[110-111] Reserved<br>byte[112-115] Power Up Count<br>byte[116-127] Reserved<br>byte[128-129] Abnormal Power Off Count<br>byte[130-159] Reserved<br>byte[160-161] Total Refresh Count<br>byte[176-183] Product "Marker"<br>byte[184-215] Bad Block count per Die<br>byte[216-511] Reserved |

*Please refer to technical note for High/Low byte definition.


©2016 Apacer Technology, Inc.

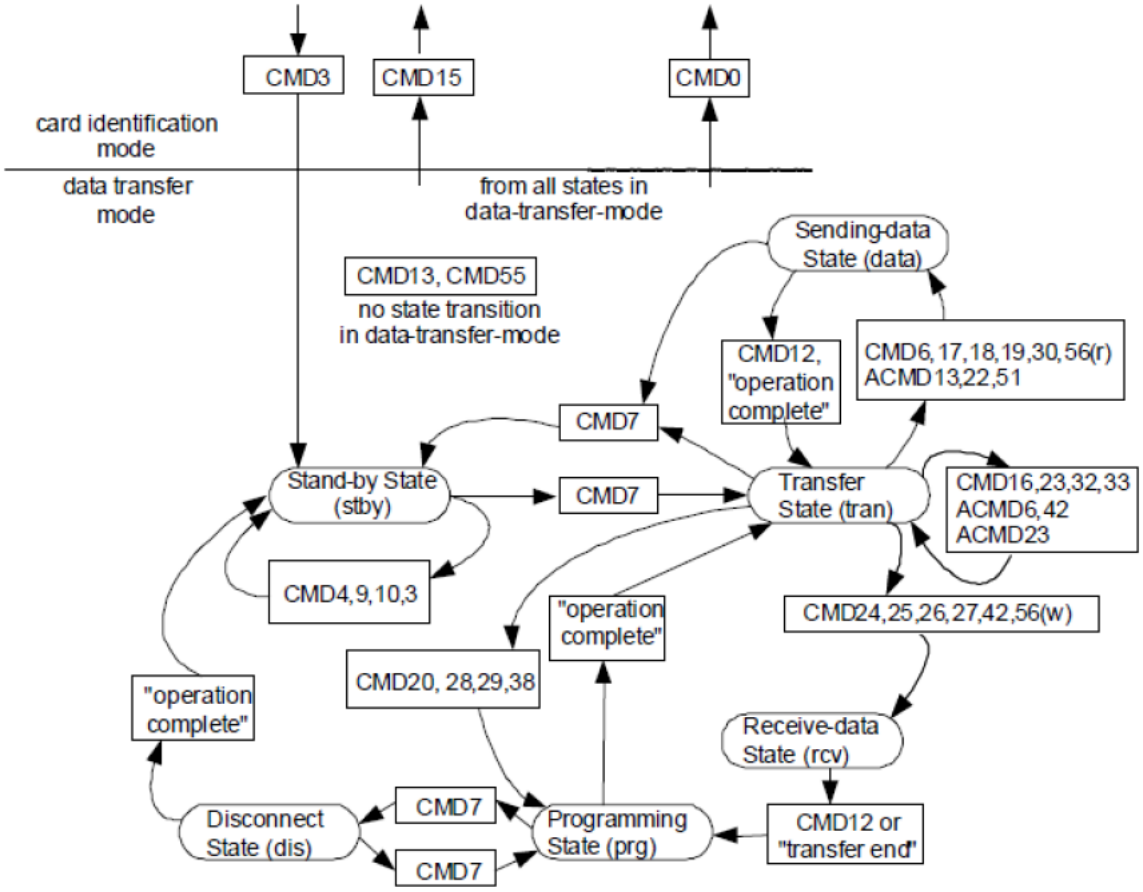


**Figure 5-1: SD Memory Card State Diagram (data transfer mode)**

Extracted from the SD Specifications Part 1 Physical Layer Simplified Specification Version 3.01.


©2016 Apacer Technology, Inc.

# 5. Product Ordering Information

## 5.1 Product Code Designations

AP – MSD xxG X A – 2X TM

**Flash Type**
TM: Toshiba MLC

**F/W**

**CTL Solution**

**Temperature**
C: Commercial Temperature
I: Extended Temperature

**Capacity**
04G: 4GB
08G: 8GB
16G: 16GB
32G: 32GB

**Model Name**

**Apacer Product Code**


©2016 Apacer Technology, Inc.

## 5.2 Valid Combinations

### 5.2.1 Commercial Temperature

| Capacity | AP/N |
|---|---|
| 4GB | AP-MSD04GCA-2HTM |
| 8GB | AP-MSD08GCA-2HTM |
| 16GB | AP-MSD16GCA-2HTM |
| 32GB | AP-MSD32GCA-2FTM |

### 5.2.2 Extended Temperature

| Capacity | AP/N |
|---|---|
| 4GB | AP-MSD04GIA-2HTM |
| 8GB | AP-MSD08GIA-2HTM |
| 16GB | AP-MSD16GIA-2HTM |
| 32GB | AP-MSD32GIA-2FTM |


©2016 Apacer Technology, Inc.

# Revision History

| Revision | Description | Date |
|---|---|---|
| 1.0 | Official release | 3/17/2016 |
| 1.1 | Revised product ordering information for 4GB-16GB due to FW change (82.105) | 7/29/2016 |
| 1.2 | Added Power Failure Management to Features and General Description | 10/3/2016 |


©2016 Apacer Technology, Inc.

# Global Presence

**Taiwan (Headquarters)**

**Apacer Technology Inc.**
1F., No.32, Zhongcheng Rd., Tucheng Dist.,
New Taipei City 236, Taiwan R.O.C.
Tel: 886-2-2267-8000
Fax: 886-2-2267-2261
amtsales@apacer.com

**U.S.A.**

**Apacer Memory America, Inc.**
46732 Lakeview Blvd., Fremont, CA 94538
Tel: 1-408-518-8699
Fax: 1-510-249-9551
sa@apacerus.com

**Japan**

**Apacer Technology Corp.**
5F, Matsura Bldg., Shiba, Minato-Ku
Tokyo, 105-0014, Japan
Tel: 81-3-5419-2668
Fax: 81-3-5419-0018
jpservices@apacer.com

**Europe**

**Apacer Technology B.V.**
Science Park Eindhoven 5051 5692 EB Son,
The Netherlands
Tel: 31-40-267-0000
Fax: 31-40-267-0000#6199
sales@apacer.nl

**China**

**Apacer Electronic (Shanghai) Co., Ltd**
Room D, 22/FL, No.2, Lane 600, JieyunPlaza,
Tianshan RD, Shanghai, 200051, China
Tel: 86-21-6228-9939
Fax: 86-21-6228-9936
sales@apacer.com.cn

**India**

**Apacer Technologies Pvt Ltd,**
Unit No.201, “Brigade Corner”, 7th Block Jayanagar,
Yediyur Circle, Bangalore – 560082, India
Tel: 91-80-4152-9061
Fax: 91-80-4170-0215
sales_india@apacer.com


**©2016 Apacer Technology, Inc.**