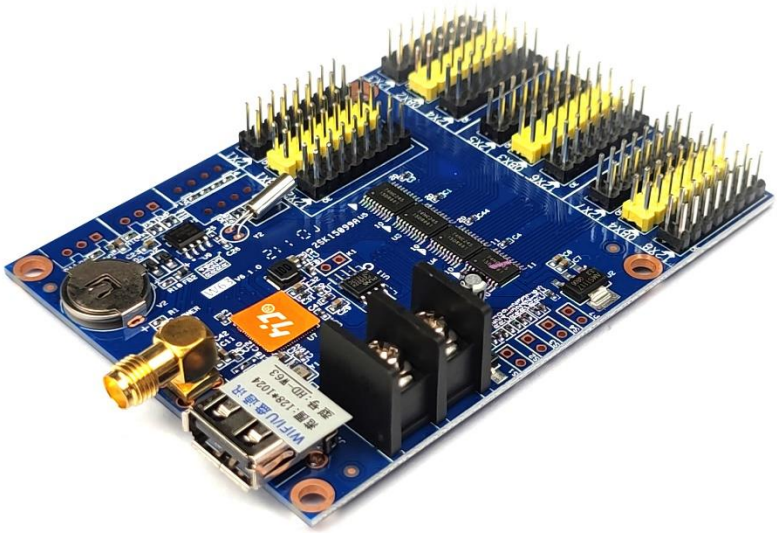

Product Specifications

Single-dual color Wi-Fi control card

HD-W63

V6.1.0 202100708

1. Product Overview

W63 is Wi-Fi control card, update programs by Wi-Fi connected, it has USB port，can also using the U-disk to update the program. Low cost, Cost-effective，simple software interface, easy to operate，better display information、good effect，supports variety kinds of single-color display.

Application software：HD2020, LedArt.

2. Working Diagram of Wi-Fi Communication

After Wi-Fi controls the card, mobile phones and laptops can connect to the Wi-Fi hotspot of the control card to debug or update programs.

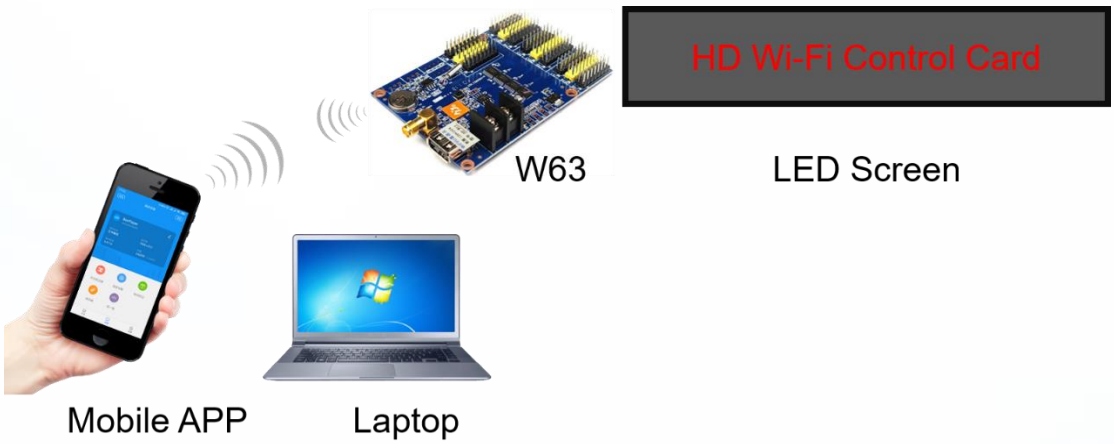

3. Features

1. 8 groups of HUB12 ports and 4 groups of HUB08 ports.
2. Supports border function of program and area, also special borders.
3. Supports various text effects for meet most application scenarios.
4. Supports font hollow, stroke and other designs.
5. Supports up to 20 areas of program content, free layout.
6. Supports external sensors such as temperature, humidity, brightness, IR remote, PM2.5/PM10, etc.
7. Support multiple displays such as animated characters, colorful characters, animated backgrounds, etc.

4. Feature Sheet

Function	Parameters
Loading capacity	Single color: 1024W*128H, (widest 2048，highest 128 pixels)
FLASH capacity	4M Byte
Communication method	Wi-Fi, U-disk
Programs quantity	1000
Area Quantity	Support MAX 20 areas with separate zone, and separated special effects and border.
Program contents	Support running text, time, count, digit, animation, temperature and humidity, excel, traditional Chinese calendar, offline weather.
Play mode	Play in order, switch by button, switch by IR remote.
Clock function	1. Support perpetual calendar, analog clock, lunar calendar 2. Counting up and down display 3. The font, font size, color, position, etc. can be set arbitrarily 4. Support multi-time zone display
Extended Equipment	Temperature, humidity, IR remote, brightness, PM2.5/PM10 etc. sensors
Screen on/off	Support screen on/off by time automatically
Brightness adjustment	Support 3 modes: adjust by hand, adjust by sensor automatically, adjust by time automatically.
Product power	3W

5. Dimension parameter for installation

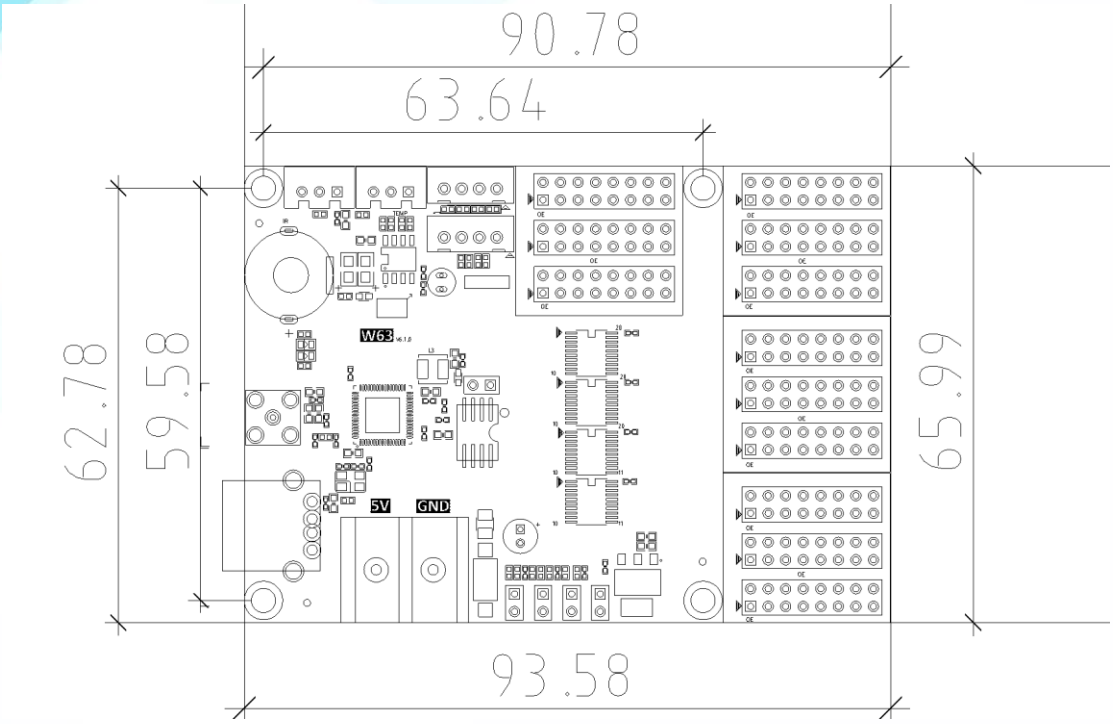

6. Interface Description

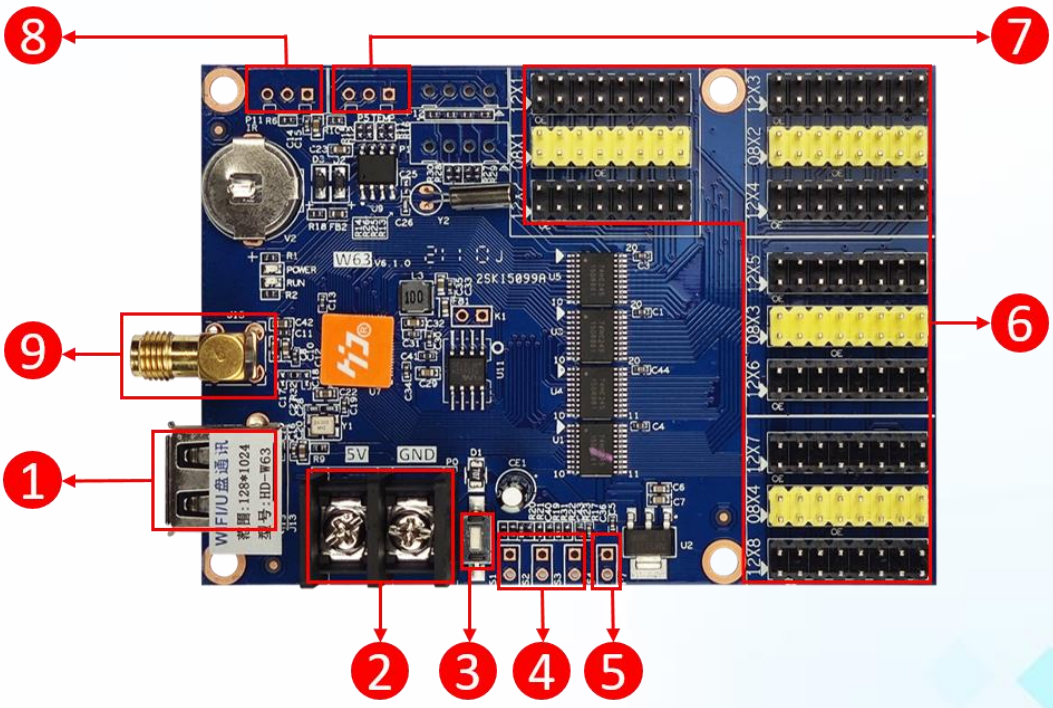

① USB port, to update program content and settings by U-disk.

② Power supply connector, to connect 5V power supply.

③ Test button, to test LED module.

④ S2/S3/S4 switch ports：S2 can be set as a button for next program, timer starts or count plus; S3 can be set as a button for previous program, timer reset or count down; S4 can be set as a button for program control, time pause, count reset.

⑤ P7, to connect brightness sensor, adjust brightness automatically.

⑥ HUB12/HUB08 port, connect to LED modules by flat cable.

⑦ P5, to connect temperature / humidity sensor.

⑧ P11, IR remote connector, to connect IR remote sensor.

⑨ Wi-Fi antenna port: used to connect with Wi-Fi external antenna.

7. HUB12/HUB08 Interface Definition

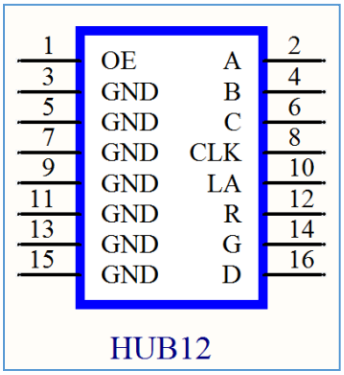

HUB12

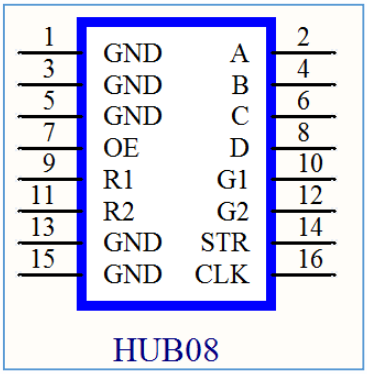

HUB08

8. Technical Parameters

	Minimum	Typical value	Maximum
Rated voltage(V)	4.2	5.0	5.5
Storage temperature（℃）	-40	25	105
Working environment temperature（℃）	-40	25	80

Working environment humidity（%）	0.0	30	95
Product net weight（kg）			
Product certificate	CE、FCC、RoHS		

Precautions

- To ensure that the control card is stored during normal operation, make sure the battery on the control card is not loose.
- In order to ensure the long-term stable operation of the system, please try to use the standard 5V power supply voltage.